USER MANUAL

HYBRID SOLAR INVERTER/CHARGER

Table Of Contents

ABOUT THIS MANUAL **1**
Purpose 1
Scope 1
SAFETY INSTRUCTIONS **1**
PRODUCT OVERVIEW **2**
INSTALLATION **3**
Unpacking and Inspection 3
Preparation 3
Mounting the Unit 3
Battery Connection 4
AC Input/Output Connection 5
PV Connection 7
Final Assembly 8
OPERATION **9**
Power ON/OFF 9
Operation and Display Panel 9
LCD Setting 10
BATTERY EQUALIZATION **17**
SETTING FOR LITHIUM BATTERY **19**
Fault Reference Code 21
Warning Indicator 22
SPECIFICATIONS **23**
Table 1 Line Mode Specifications 23
Table 2 Inverter Mode Specifications 24
Table 3 Charge Mode Specifications 25
Table 4 General Specifications 25
TROUBLE SHOOTING **26**

ABOUT THIS MANUAL

Purpose

This manual describes the assembly, installation, operation and troubleshooting of this unit. Please read this manual carefully before installations and operations. Keep this manual for future reference.

Scope

This manual provides safety and installation guidelines as well as information on tools and wiring.

SAFETY INSTRUCTIONS

WARNING: This chapter contains important safety and operating instructions. Read and keep this manual for future reference.

1. Before using the unit, read all instructions and cautionary markings on the unit, the batteries and all appropriate sections of this manual.
2. **CAUTION** --To reduce risk of injury, charge only deep-cycle lead acid type rechargeable batteries. Other types of batteries may burst, causing personal injury and damage.
3. Do not disassemble the unit. Take it to a qualified service center when service or repair is required. Incorrect re-assembly may result in a risk of electric shock or fire.
4. To reduce risk of electric shock, disconnect all wirings before attempting any maintenance or cleaning. Turning off the unit will not reduce this risk.
5. **CAUTION** – Only qualified personnel can install this device with battery.
6. **NEVER** charge a frozen battery.
7. For optimum operation of this inverter/charger, please follow required spec to select appropriate cable size. It's very important to correctly operate this inverter/charger.
8. Be very cautious when working with metal tools on or around batteries. A potential risk exists to drop a tool to spark or short circuit batteries or other electrical parts and could cause an explosion.
9. Please strictly follow installation procedure when you want to disconnect AC or DC terminals. Please refer to INSTALLATION section of this manual for the details.
10. Fuse is provided as over-current protection for the battery supply.
11. GROUNDING INSTRUCTIONS -This inverter/charger should be connected to a permanent grounded wiring system. Be sure to comply with local requirements and regulation to install this inverter.
12. NEVER cause AC output and DC input short circuited. Do NOT connect to the mains when DC input short circuits.
13. **Warning!!** Only qualified service persons are able to service this device. If errors still persist after following troubleshooting table, please send this inverter/charger back to local dealer or service center for maintenance.

PRODUCT OVERVIEW

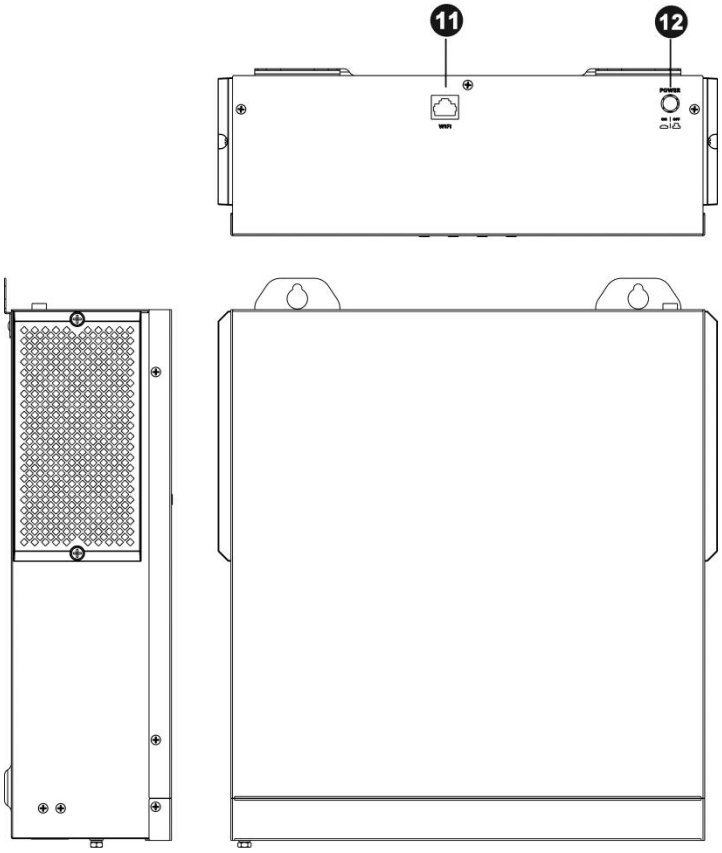

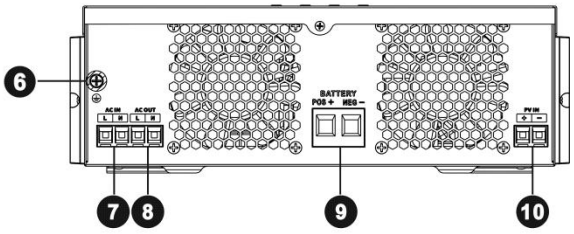

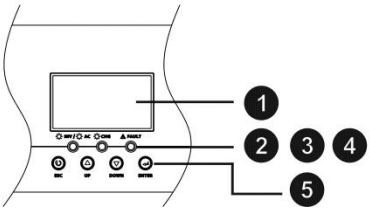

1. LCD display
2. Status indicator
3. Charging indicator
4. Fault indicator
5. Function buttons
6. Grounding
7. AC input
8. AC output
9. Battery input
10. PV input
11. WIFI communication port
12. Power on/off switch

INSTALLATION

Unpacking and Inspection

Before installation, please inspect the unit. Be sure that nothing inside the package is damaged. You should have received the following items inside of package:

1. The unit x 1
2. User manual x 1
3. AC terminal (red x 2 / black x 2)
4. PV terminal (red x 1 / black x 1)

Preparation

Before connecting all wirings, please take off bottom cover by removing three screws as shown below.

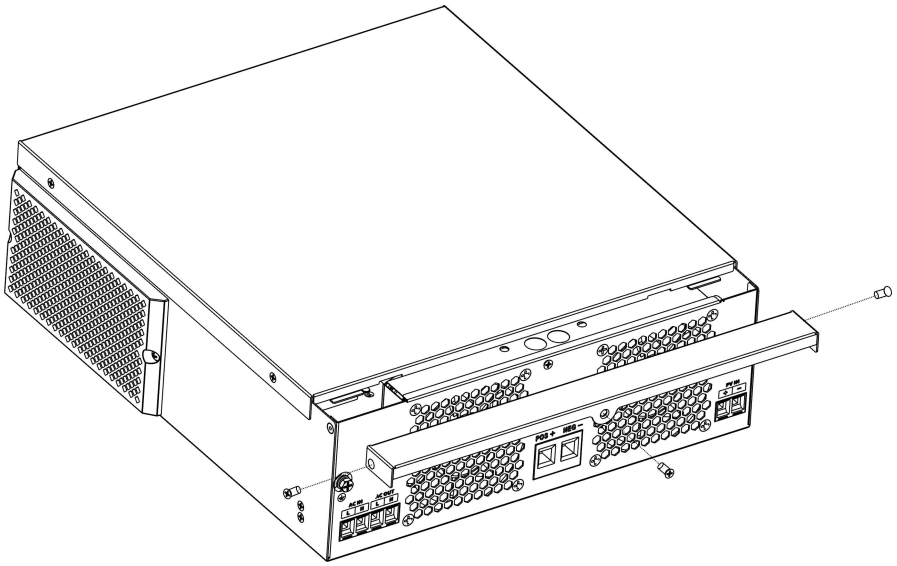

Mounting the Unit

Consider the following points before selecting where to install:

1. Do not mount the inverter on flammable construction materials.
2. Mount on a solid surface
3. Install this inverter at eye level in order to allow the LCD display to be read at all times.
4. The ambient temperature should be between 0°C and 55°C to ensure optimal operation.
5. The recommended installation position is to be adhered to the wall vertically.
6. Be sure to keep other objects and surfaces as shown in the right diagram to guarantee sufficient heat dissipation and to have enough space for removing wires.

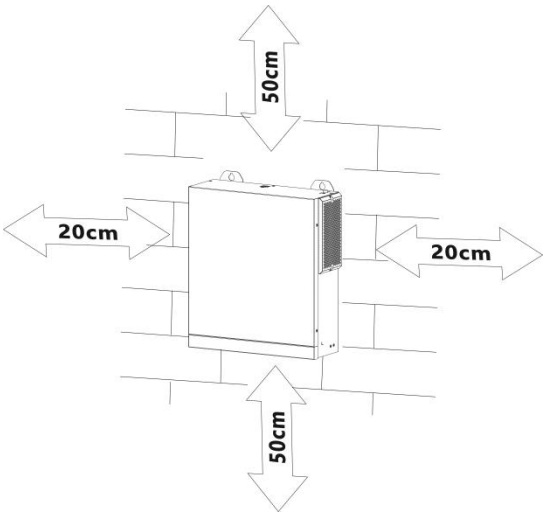

⚠ **SUITABLE FOR MOUNTING ON CONCRETE OR OTHER NON-COMBUSTIBLE SURFACE ONLY.**

Install the unit by screwing three screws. It's recommended to use M4 or M5 screws.

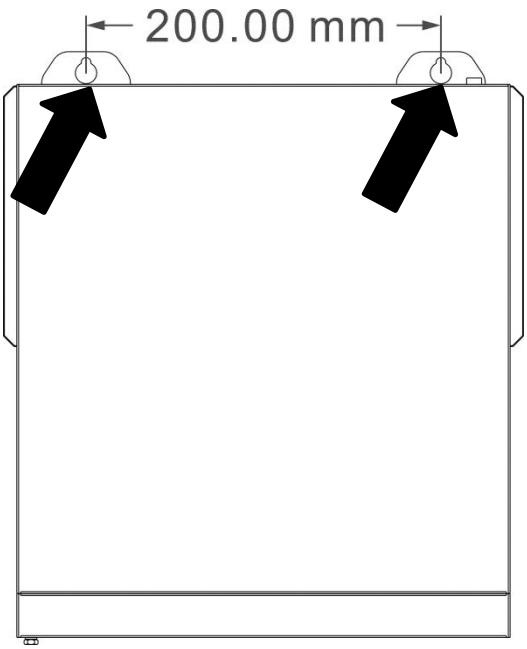

Battery Connection

CAUTION: For safety operation and regulation compliance, it's requested to install a separate DC over-current protector or disconnect device between battery and inverter. It may not be requested to have a disconnect device in some applications, however, it's still requested to have over-current protection installed. Please refer to typical amperage in below table as required fuse or breaker size.

Stripping Length:

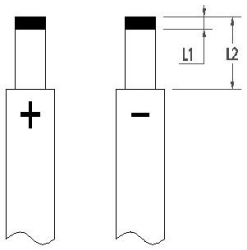

WARNING! All wiring must be performed by a qualified personnel.
WARNING! It's very important for system safety and efficient operation to use appropriate cable for battery connection. To reduce risk of injury, please use the proper recommended cable 、stripping length(L2) and tinning length(L1) as below.

Recommended battery cable 、stripping length (L2) and tinning length(L1):

Model	Maximum Amperage	Battery capacity	Wire Size	Cable mm^2	L1 (mm)	L 2 (mm)	Torque value
1500W-24	70A	100AH	6AWG	13.3	3	18	2~ 3 Nm
2500W-24	100A	100AH	4AWG	21.15	3	18	2~ 3 Nm
Other Models	140A	100AH	2AWG	38	3	18	2~ 3 Nm

Please follow below steps to implement battery connection:

1. Remove insulation sleeve 18 mm for positive and negative cables based on recommended stripping length.
2. Connect all battery packs as units requires. It's suggested to use recommended battery capacity.
3. Insert battery cable flatly into battery connector of inverter and make sure the bolts are tightened with torque of 2-3 Nm. Make sure polarity at both the battery and the inverter/charge is correctly connected and battery cables are tightly screwed to the battery connector.

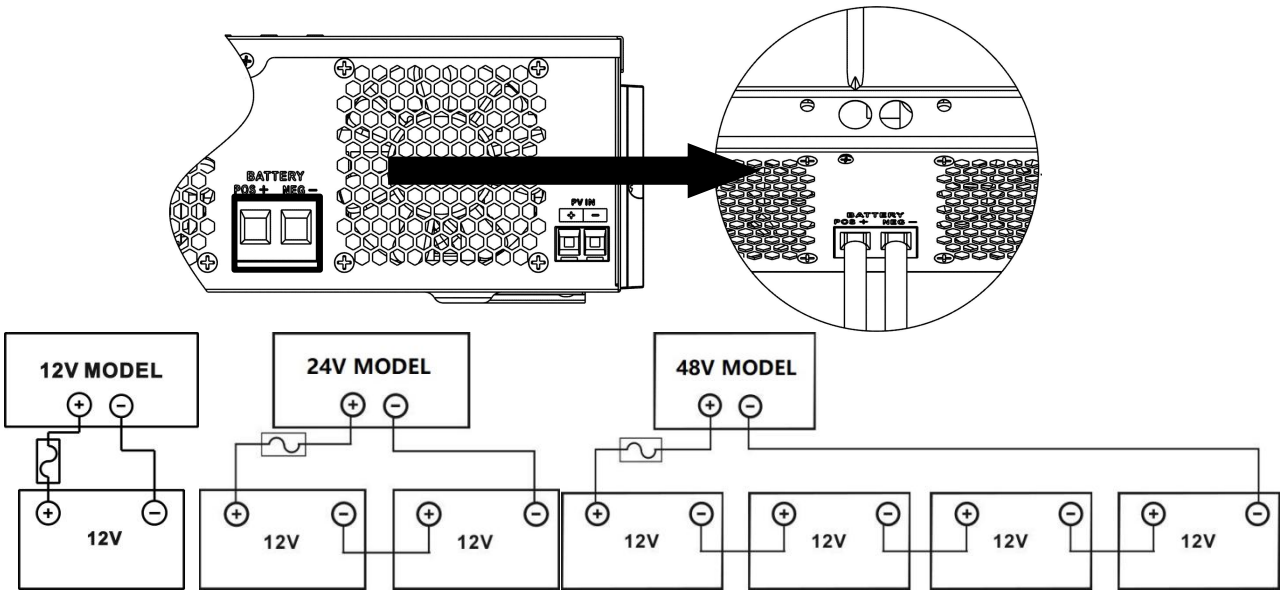

⚠	**WARNING: Shock Hazard** Installation must be performed with care due to high battery voltage in series.

⚠	**CAUTION!!** Do not place anything between the flat part of the inverter terminal Otherwise, overheating may occur. **CAUTION!!** Do not apply anti-oxidant substance on the terminals before terminals are connected tightly. **CAUTION!!** Before making the final DC connection or closing DC breaker/disconnector, be sure positive (+) must be connected to positive (+) and negative (-) must be connected to negative (-).

AC Input/Output Connection

CAUTION!! Before connecting to AC input power source, please install a **separate** AC breaker between inverter and AC input power source. This will ensure the inverter can be securely disconnected during maintenance and fully protected from over current of AC input. The recommended spec of AC breaker is 50A.

CAUTION!! There are two terminal blocks with "IN" and "OUT" markings. Please do NOT mis-connect input and output connectors.

WARNING! All wiring must be performed by a qualified personnel.
WARNING! It's very important for system safety and efficient operation to use appropriate cable for AC input connection. To reduce risk of injury, please use the proper recommended cable size as below.
Suggested cable requirement for AC wires

Model	Gauge	Torque Value
1.5KW	12AWG	1.4~ 1.6Nm
2.5KW/3.5W	10AWG	1.4~ 1.6Nm
5.5KW	8 AWG	1.4~ 1.6Nm

Please follow below steps to implement AC input/output connection:

1. Before making AC input/output connection, be sure to open DC protector or disconnector first.
2. Remove insulation sleeve 10mm for six conductors. And shorten phase L and neutral conductor N 3 mm.
3. Insert AC input wires according to polarities indicated on terminal block and tighten the terminal screws. Be sure to connect PE protective conductor (⏚) first.

   ⏚→**Ground (yellow-green)**

   L→LINE (brown or black)

   N→Neutral (blue)

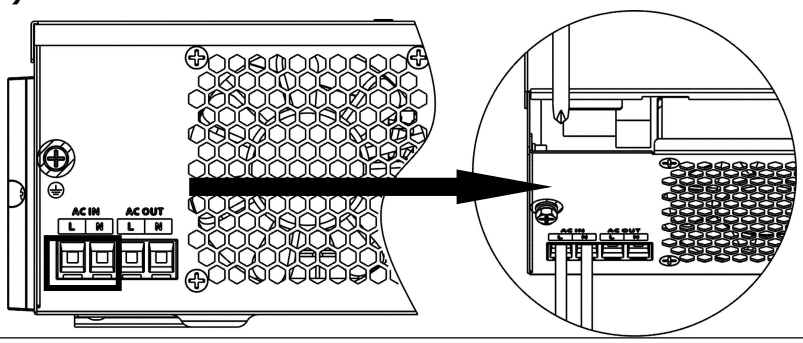

⚠	**WARNING:** Be sure that AC power source is disconnected before attempting to hardwire it to the unit.

4. Then, insert AC output wires according to polarities indicated on terminal block and tighten terminal screws. Be sure to connect PE protective conductor (⏚) first.

   ⏚→**Ground (yellow-green)**

   L→LINE (brown or black)

   N→Neutral (blue)

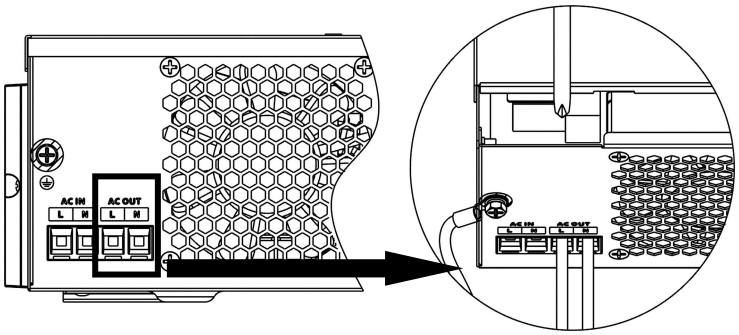

5. Make sure the wires are securely connected.

CAUTION: Important

Be sure to connect AC wires with correct polarity. If L and N wires are connected reversely, it may cause utility short-circuited when these inverters are worked in parallel operation.

CAUTION: Appliances such as air conditioner are required at least 2~3 minutes to restart because it's required to have enough time to balance refrigerant gas inside of circuits. If a power shortage occurs and recovers in a short time, it will cause damage to your connected appliances. To prevent this kind of damage, please check manufacturer of air conditioner if it's equipped with time-delay function before installation. Otherwise, this inverter/charger will trig overload fault and cut off output to protect your appliance but sometimes it still causes internal damage to the air conditioner.

PV Connection

CAUTION: Before connecting to PV modules, please install **separately** a DC circuit breaker between inverter and PV modules.

WARNING! All wiring must be performed by a qualified personnel.
WARNING! It'' very important for system safety and efficient operation to use appropriate cable for PV module connection. To reduce risk of injury, please use the proper recommended cable size as below.

Model	Typical Amperage	Cable Size	Torque
1.5KW-3.5KW	15A	12 AWG	1.4~1.6 Nm
5.5KW	18A	12 AWG	1.4~1.6 Nm

PV Module Selection:
When selecting proper PV modules, please be sure to consider below parameters:
1. Open circuit Voltage (Voc) of PV modules not exceeds max. PV array open circuit voltage of inverter.
2. Open circuit Voltage (Voc) of PV modules should be higher than min. battery voltage.

Solar Charging Mode		
INVERTER MODEL	1.5KW-3.5KW	5.5KW
Max. PV Array Open Circuit Voltage	500DC	
PV Array MPPT Voltage Range	30VDC~500VDC	60VDC~500VDC
Max. PV INPUT CURRENT	15A	18A

Take the 450Wp and 550Wp PV module as an example. After considering above two parameters, the recommended module configurations are listed in the table below.

	SOLAR INPUT	Q'ty of panels	Total input power	Inverter Model
Solar Panel Spec. (reference) - 450Wp - Vmp: 34.67Vdc - Imp: 13.82A - Voc: 41.25Vdc - Isc: 12.98A	1 pcs in serial	1 pcs	450 W	1.5KW-5.5KW
	2 pcs in serial	2 pcs	900 W	1.5KW-5.5KW
	3 pcs in serial	3 pcs	1,350 W	1.5KW-5.5KW
	4 pcs in serial	4 pcs	1,800 W	1.5KW-5.5KW
	5 pcs in serial	5 pcs	2,250 W	2.5KW-5.5KW
	6 pcs in serial	6 pcs	2,700 W	2.5KW-5.5KW
	7 pcs in serial	7 pcs	3,150 W	2.5KW-5.5KW
	8 pcs in serial	8 pcs	3,600 W	3.5KW-5.5KW
	9 pcs in serial	9 pcs	4,050 W	3.5KW-5.5KW
	10 pcs in serial	10 pcs	4,500 W	5.5KW
	11 pcs in serial	11 pcs	4,950 W	
	12 pcs in serial	12 pcs	5,400 W	
	6 pieces in serial and 2 sets in parallel	12 pcs	5,400 W	
	SOLAR INPUT	Q'ty of panels	Total input power	Inverter Model
Solar Panel Spec. (reference) - 550Wp - Vmp: 42.48Vdc - Imp: 12.95A - Voc: 50.32Vdc - Isc: 13.70A	1 pcs in serial	1 pcs	550 W	1.5KW-5.5KW
	2 pcs in serial	2 pcs	1,150 W	1.5KW-5.5KW
	3 pcs in serial	3 pcs	1,650 W	1.5KW-5.5KW
	4 pcs in serial	4 pcs	2,200 W	2.5KW-5.5KW
	5 pcs in serial	5 pcs	2,750 W	2.5KW-5.5KW
	6 pcs in serial	6 pcs	3,300 W	3.5KW-5.5KW
	7 pcs in serial	7 pcs	3,850 W	3.5KW-5.5KW
	8 pcs in serial	8 pcs	4,400 W	5.5KW
	9 pcs in serial	9 pcs	4,950 W	
	4 pieces in serial and 2 sets in parallel	8 pcs	4,400 W	
	5 pieces in serial and 2 sets in parallel	10 pcs	5,500 W	

PV Module Wire Connection:

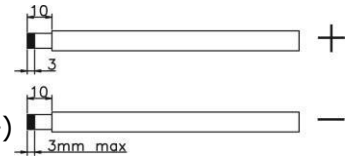

Please follow below steps to implement PV module connection:

1. Remove insulation sleeve 10 mm for positive and negative conductors.
2. Check correct polarity of connection cable from PV modules and PV input connectors. Then, connect positive pole (+) of connection cable to positive pole (+) of PV input connector. Connect negative pole (-) of connection cable to negative pole (-) of PV input connector.

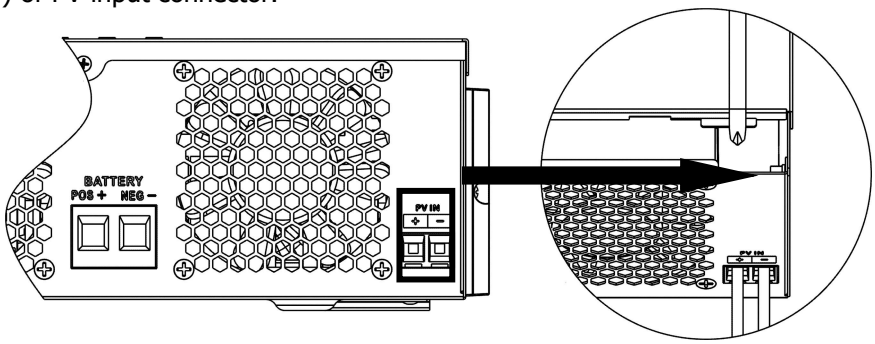

3. Make sure the wires are securely connected.

Final Assembly

After connecting all wirings, please put bottom cover back by screwing two screws as shown below.

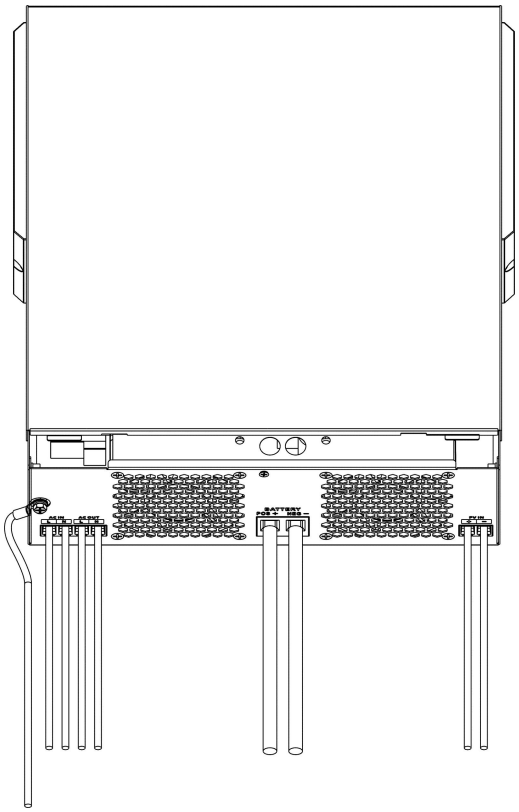

OPERATION

Power ON/OFF

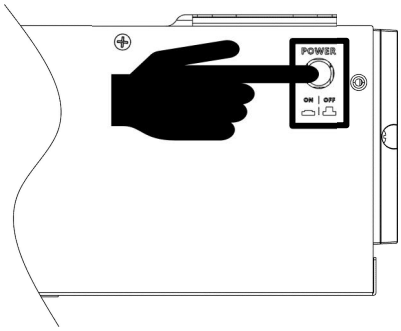

Once the unit has been properly installed and the batteries are connected well, simply press On/Off switch (located on the button of the case) to turn on the unit.

Operation and Display Panel

The operation and display panel, shown in below chart, is on the front panel of the inverter. It includes three indicators, four function keys and a LCD display, indicating the operating status and input/output power information.

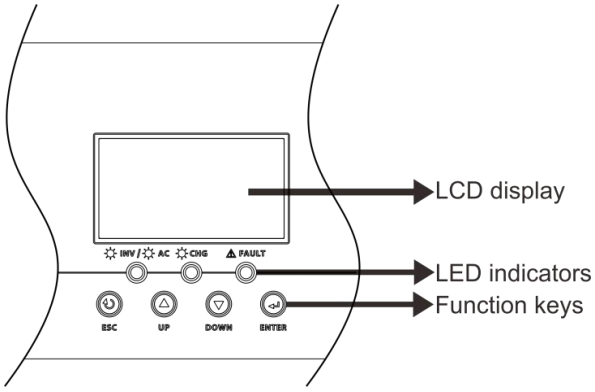

LED Indicator

LED Indicator			Messages
AC / INV	Green	Solid On	Output is powered by utility in Line mode.
		Flashing	Output is powered by battery or PV in battery mode.
CHG	Green	Solid On	Battery is fully charged.
		Flashing	Battery is charging.
⚠ FAULT	Red	Solid On	Fault occurs in the inverter.
		Flashing	Warning condition occurs in the inverter.

Function Keys

Function Key	Description
ESC	To exit setting mode
UP	To go to previous selection
DOWN	To go to next selection
ENTER	To confirm the selection in setting mode or enter setting mode

LCD Setting

After pressing and holding ENTER button for 3 seconds, the unit will enter setting mode. Press "UP" or "DOWN" button to select setting programs. And then, press "ENTER" button to confirm the selection or ESC button to exit.

Setting Programs:

Program	Description	Selectable option	
01	Output source priority: To configure load power source priority	Utility first (default) 01 UtI	Utility will provide power to the loads as first priority. Solar and battery energy will provide power to the loads only when utility power is not available.
		Solar first 01 SOL	Solar energy provides power to the loads as first priority. If solar energy is not sufficient to power all connected loads, battery energy will supply power the loads at the same time. Utility provides power to the loads only when any one condition happens: - Solar energy is not available Battery voltage drops to either low-level warning voltage or the setting point in program 12.
		SBU priority 01 SbU	Solar energy provides power to the loads as first priority. If solar energy is not sufficient to power all connected loads, battery energy will supply power to the loads at the same time. Utility provides power to the loads only when battery voltage drops to either low-level warning voltage or the setting point in program 12.
		SUB priority 01 SUb	Solar energy is charged first and then power to the loads. If solar energy is not sufficient to power all connected loads, Utility energy will supply power to the loads at the same time.

		SUF priority 01 SUF	If solar energy is sufficient to all connected loads and charge battery, the solar energy could feedback to the grid If solar energy is not sufficient to power all connected loads, utility energy will supply power to the loads at the same time.
02	Maximum charging current: To configure total charging current for solar and utility chargers. (Max. charging current = utility charging current + solar charging current)	60A (default) 02 60A	If selected, acceptable charging current range will be from Max. AC charging current to Max. charging current of SPEC, but it shouldn't be less than the AC charging current (program 11)
03	AC input voltage range	Appliances (default) 03 APL	If selected, acceptable AC input voltage range will be within 90-280VAC.
		UPS 03 UPS	If selected, acceptable AC input voltage range will be within 170-280VAC.
		Generator 03 GNt	If selected, acceptable AC input voltage range will be within 90-280VAC and compatible with generators. Note: Because generators are unstable, maybe the output of inverter will be unstable too.
05	Battery type	AGM (default) 05 AGn	Flooded 05 FLd
		User-Defined 05 USE	If "User-Defined" is selected, battery charge voltage and low DC cut-off voltage can be set up in program 26, 27 and 29.
		Lithium battery without communication 05 Lib	If "LIB" is selected, the battery default value is fit for lithium battery without communication battery charge voltage and low DC cut-off voltage can be set up in program 26,27 and 29.
06	Auto restart when overload occurs	Restart disable 06 LRd	Restart enable (default) 06 LRE

07	Auto restart when over temperature occurs	Restart disable 07 tRd	Restart enable (default) 07 tRE
08	Output voltage	220V 08 220V	230V (default) 08 230V
		240V 08 240V	
09	Output frequency	50Hz (default) 09 50Hz	60Hz 09 60Hz
10	Auto bypass When selecting "auto", if the mains power is normal, it will automatically bypass, even if the switch is off.	manual(default) 10 nAL	auto 10 AtO
11	Maximum utility charging current	30A (default) 11 30A If selected, acceptable charging current range will be within 2-Max. AC charging current of SPEC.	
12	Setting voltage point back to utility source when selecting "SBU priority" or "Solar first" in program 01.	**48V models:**46V (default) Setting range is from 44.0V to 57.2V for 48v model, but the max setting value must be less than the value of program13 and the minimum setting value must be more than the value of 29.	
		24V models:23V (default) Setting range is from 22.0V to 28.6V for 24v model, but The max setting value must be less than the value of program13 and the minimum setting value must be more than the value of 29.	
		12V models:11.5V (default) Setting range is from 11.0V to 14.3V for 12v model, but The max setting value must be less than the value of program13 and the minimum setting value must be more than the value of 29.	
13	Setting voltage point back to battery mode when selecting "SBU priority" or "Solar first" in program 01.	Battery fully charged (default) 13 BATT FUL	**48V models:** Setting range is from 48V to full (the value of program26-0.4V), but the max setting value must be more than the value of program12. **24V models:** Setting range is from 24V to full (the value of program26-0.4V), but the max setting value must be more than the value of program12. **12V models:** Setting range is from 12V to full (the value of program13-0.4V), but the max setting value must be more than the value of program12.

16	Charger source priority: To configure charger source priority	If this inverter/charger is working in Line, Standby or Fault mode, charger source can be programmed as below:	
		Solar first 16 CSO	Solar energy will charge battery as first priority. Utility will charge battery only when solar energy is not available.
		Solar and Utility (default) 16 SNU	Solar energy and utility will charge battery at the same time.
		Only Solar 16 OSO	Solar energy will be the only charger source no matter utility is available or not.
		If this inverter/charger is working in Battery mode, only solar energy can charge battery. Solar energy will charge battery if it's available and sufficient.	
18	Buzzer mode	Mode1 bU2 18 nd1	Buzzer mute
		Mode2 bU2 18 nd2	The buzzer sounds when the input source changes or there is a specific warning or fault
		Mode3 bU2 18 nd3	The buzzer sounds when there is a specific warning or fault
		Mode4(default) bU2 18 nd4	The buzzer sounds when there is a fault
19	Auto return to default display screen	Return to default display screen (default) 19 ESP	If selected, no matter how users switch display screen, it will automatically return to default display screen (Input voltage /output voltage) after no button is pressed for 1 minute.
		Stay at latest screen 19 bEP	If selected, the display screen will stay at latest screen user finally switches.
20	Backlight control	Backlight on (default) 20 LON	Backlight off 20 LOF
23	Overload bypass: When enabled, the unit will transfer to line mode if overload occurs in battery mode.	Bypass disable 23 byd	Bypass enable(default) 23 byE

25	Modbus ID Setting	Modbus ID Setting Range ： 001(default)~247 nOd 25 001	
26	Bulk charging voltage (C.V voltage)	If self-defined is selected in program 5, this program can be set up. But the setting value must be more than or equal the value of program27. Increment of each click is 0.1V. 12V models: Default 14.1V, setting range is from 12.0V to 15.5V, 24V models: Default 28.2V, setting range is from 24.0V to 30.0V , 48V models: Default 56.4V, setting range is from 48.0V to 62.0V.	
27	Floating charging voltage	If self-defined is selected in program 5, this program can be set up. 12V models default setting: 13.5V Setting range is from 12.0V to the value of program 26 24V models default setting: 27.0V Setting range is from 24.0V to the value of program 26 48V models default setting: 54.0V Setting range is from 48.0V to the value of program 26	
29	Low DC cut-off voltage	If self-defined is selected in program 5, this program can be set up. The setting value must be less than the value of program12. Increment of each click is 0.1V.Low DC cut-off voltage will be fixed to setting value no matter what percentage of load is connected. 12V models default setting: 10.5v Setting range is from 10.0V to 13.5V 24V models default setting: 21.0v Setting range is from 20.0V to 27.0V 48V models default setting: 42.0V Setting range is from 40.0V to 54.0V	
32	Bulk charging time (C.V stage)	Automatically (Default): 32 AUt	If selected, inverter will judge this charging time automatically.
		5 min 32 5	The setting range is from 5 min to 900 min. Increment of each click is 5 min.
		900 min 32 900	
		If "USE" is selected in program 05, this program can be set up.	
33	Battery equalization	Battery equalization 33 EEn	Battery equalization disable (default) 33 EdS
		If "Flooded" or "User-Defined" is selected in program 05, this program can be set up.	

34	Battery equalization voltage	12V models default setting is 14.6V. Setting range is from floating voltage ~ 15.5V. Increment of each click is 0.1V. 24V models default setting is 29.2V. Setting range is from floating voltage ~ 30V. Increment of each click is 0.1V. 48V models default setting is 58.4V. Setting range is from floating voltage ~ 62V. Increment of each click is 0.1V.	
35	Battery equalized time	60min (default) 35 60	Setting range is from 0 min to 900min.
36	Battery equalized timeout	120min (default) 36 120	Setting range is from 0min to 900 min.
37	Equalization interval	30days (default) 37 30d	Setting range is from 1 to 90 days.
39	Equalization activated immediately	Enable 39 AEN	Disable (default) 39 AdS
		If equalization function is enabled in program 33, this program can be set up. If "Enable" is selected in this program, it's to activate battery equalization immediately and LCD main page will shows " E9". If "Disable" is selected, it will cancel equalization function until next activated equalization time arrives based on program 37 setting. At this time, "E9" will not be shown in LCD main page..	
41	Automatic activation for lithium battery. Note: This function is just available for supporting lithium battery activation models, other models are reserve setting item	AAt 41 nnL	Disable automatic activation (default)
		AAt 41 AtO	When Program05 is selected "LIx" or "User-Defined "as lithium battery and when the battery is not detected, the unit will activate automatically the lithium battery at a time. If you want to activate automatically the lithium battery, you must restart the unit.
42	Manual activation for lithium battery. Note: This function is just available for supporting lithium battery activation models, other models are reserve setting item	nAt 42 nOP	Default: disable activation
		nAt 42 ACt	When Program05 is selected "LIx" as lithium battery, when the battery is not detected, If you want to activate the lithium battery at a time, you could selected it.

46	Maximum discharge current protection	ndC 46 OFF	Default OFF Disable current discharge current protection function
		ndC 46 100A	Only available in Single model. When utility is available, it turns to utility model and battery discharge stops after the battery discharge current exceeded the setting value. When utility is unavailable, warning occurs and battery discharge lasts after the battery discharge current exceeded the setting value. The setting range is from 20A to 500A.
48	lithium battery activation time	48 006	When lithium battery activation function is available, the activation time could be set, the setting range is 6s~300s,the default time is 6s;

BATTERY EQUALIZATION

Equalization function is added into charge controller. It reverses the buildup of negative chemical effects like stratification, a condition where acid concentration is greater at the bottom of the battery than at the top. Equalization also helps to remove sulfate crystals that might have built up on the plates. If left unchecked, this condition, called sulfation, will reduce the overall capacity of the battery. Therefore, it's recommended to equalize battery periodically.

- **How to Apply Equalization Function**

You must enable battery equalization function in monitoring LCD setting program 33 first. Then, you may apply this function in device by either one of following methods:

1. Setting equalization interval in program 37.
2. Active equalization immediately in program 39.

- **When to Equalize**

In float stage, when the setting equalization interval (battery equalization cycle) is arrived, or equalization is active immediately, the controller will start to enter Equalize stage.

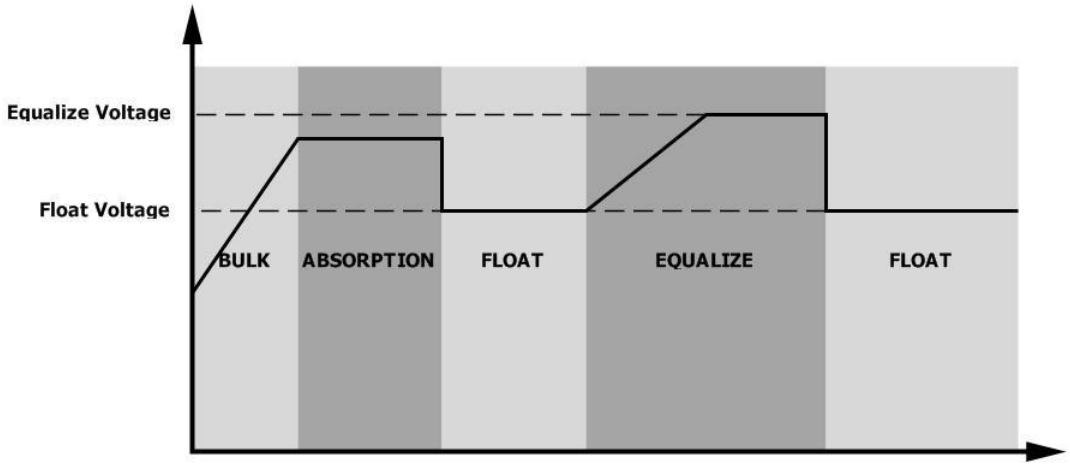

- **Equalize charging time and timeout**

In Equalize stage, the controller will supply power to charge battery as much as possible until battery voltage raises to battery equalization voltage. Then, constant-voltage regulation is applied to maintain battery voltage at the battery equalization voltage. The battery will remain in the Equalize stage until setting battery equalized time is arrived.

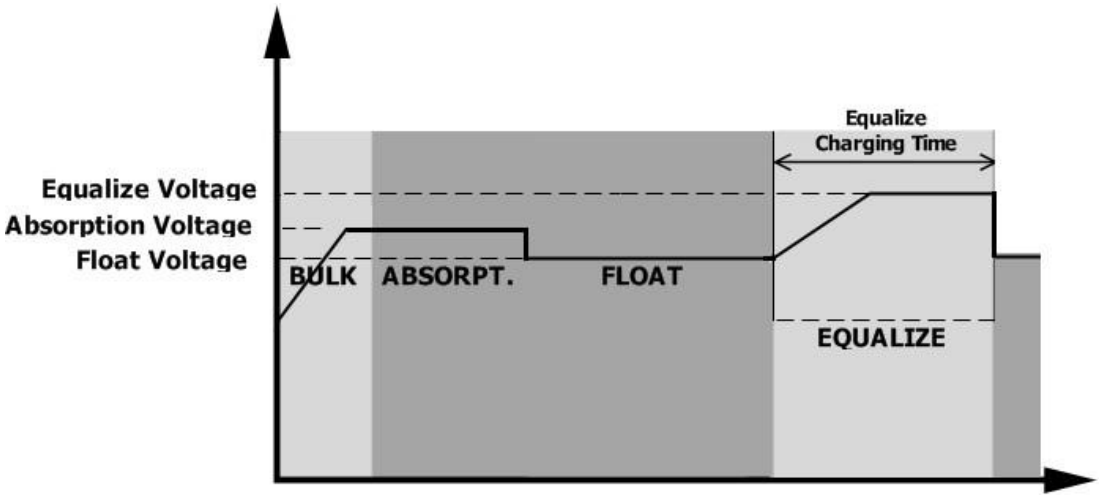

However, in Equalize stage, when battery equalized time is expired and battery voltage doesn't rise to battery equalization voltage point, the charge controller will extend the battery equalized time until battery voltage achieves battery equalization voltage. If battery voltage is still lower than battery equalization voltage when battery equalized timeout setting is over, the charge controller will stop equalization and return to float stage.

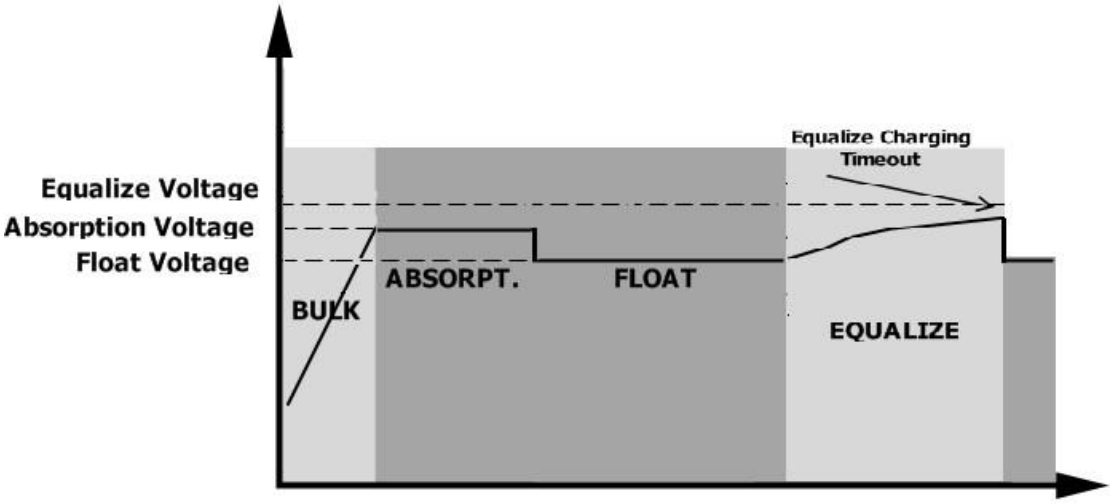

SETTING FOR LITHIUM BATTERY

Setting for lithium battery without communication

This suggestion is used for lithium battery application and avoid lithium battery BMS protection without communication, please finish the setting as follow:

1.Before starting setting，you must get the battery BMS specification：

A. Max charging voltage

B. Max charging current

C. Discharging protection voltage

2.Set battery type as"LIB"

05	Battery type	AGM (default) 05 AGn	Flooded 05 FLd
		User-Defined 05 USE	If "User-Defined" is selected, battery charge voltage and low DC cut-off voltage can be set up in program 26, 27 and 29.
		Lithium battery without communication 05 LIb	If "LIB" is selected, the battery default value is fit for lithium battery without communication battery charge voltage and low DC cut-off voltage can be set up in program 26,27 and 29.

3. Set C.V voltage as Max charging voltage of BMS-0.5V.

26	Bulk charging voltage (C.V voltage)	If self-defined is selected in program 5, this program can be set up. But the setting value must be more than or equal the value of program27. Increment of each click is 0.1V. 12V models: Default 14.1V, setting range is from 12.0V to 15.5V, 24V models: Default 28.2V, setting range is from 24.0V to 30.0V , 48V models: Default 56.4V, setting range is from 48.0V to 62.0V.

4. Set floating charging voltage as C.V voltage.

27	Floating charging voltage	If self-defined is selected in program 5, this program can be set up. 12V models default setting: 13.5V Setting range is from 12.0V to the value of program 26 24V models default setting: 27.0V Setting range is from 24.0V to the value of program 26 48V models default setting: 54.0V Setting range is from 48.0V to the value of program 26

5. Set Low DC cut-off voltage ≥discharging protection voltage of BMS+2V.

29	Low DC cut-off voltage	If self-defined is selected in program 5, this program can be set up. The setting value must be less than the value of program12. Increment of each click is 0.1V.Low DC cut-off voltage will be fixed to setting value no matter what percentage of load is connected. 12V models default setting: 10.5v Setting range is from 10.0V to 13.5V 24V models default setting: 21.0v Setting range is from 20.0V to 27.0V 48V models default setting: 42.0V Setting range is from 40.0V to 54.0V

6. Set Max charging current which must be less than the Max charging current of BMS.

02	Maximum charging current: To configure total charging current for solar and utility chargers. (Max. charging current = utility charging current + solar charging current)	60A (default) 	If selected, acceptable charging current range will be within 1- Max. charging current of SPEC, but it shouldn't be less than the AC charging current (program 11)

7. Setting voltage point back to utility source when selecting "SBU priority" or "Solar first" in program 01.The setting value must be ≥Low DC cut-off voltage+1V, or else the inverter will have a warning as battery voltage low.

12	Setting voltage point back to utility source when selecting "SBU priority" or "Solar first" in program 01.	**48V models:**46V (default) Setting range is from 44.0V to 57.2V for 48v model, but the max setting value must be less than the value of program13.
		24V models:23V (default) Setting range is from 22.0V to 28.6V for 24v model, but The max setting value must be less than the value of program13.
		12V models:11.5V (default) Setting range is from 11.0V to 14.3V for 12v model, but The max setting value must be less than the value of program13.

Remark:
1.you'd better to finish setting without turn on the inverter(just let the LCD show, no output);
2.when you finish setting, please restart the inverter.

Fault Reference Code

Fault Code	Fault Event	Icon on
01	Over temperature of inverter module	01
02	Over temperature of DCDC module	02
03	Battery voltage is too high	03
04	Over temperature of PV module	04
05	Output short circuited.	05
06	Output voltage is too high.	06
07	Overload time out	07
08	Bus voltage is too high	08
09	Bus soft start failed	09
10	PV over current	10
11	PV over voltage	11
12	DCDC over current	12
13	Over current or surge	13
14	Bus voltage is too low	14
15	Inverter failed (Self-checking)	15
18	Op current offset is too high	18
19	Inverter current offset is too high	19
20	DC/DC current offset is too high	20
21	PV current offset is too high	21
22	Output voltage is too low	22
23	Inverter negative power	23

Warning Indicator

Warning Code	Warning Event	Audible Alarm	Icon flashing
02	Temperature is too High	Beep three times every second	
04	Low battery	Beep once every second	
07	Overload	Beep once every 0.5 second	OVER LOAD
10	Output power derating	Beep twice every 3 seconds	
14	Fan blocked	None	
15	PV energy is low	Beep twice every 3 seconds	
19	Lithium Battery communication is failed	Beep once every 0.5 second	
21	Lithium Battery over current	None	
E9	Battery equalization	None	
bP	Battery is not connected	None	

SPECIFICATIONS

Table 1 Line Mode Specifications

INVERTER MODEL	1.5KW	1.5KW	2.5KW	3.5KW	5.5KW
Input Voltage Waveform	Sinusoidal (Utility or Generator)				
Nominal Input Voltage	230Vac				
Low Loss Voltage	170Vac±7V (UPS) 90Vac±7V (Appliances)				
Low Loss Return Voltage	180Vac±7V (UPS); 100Vac±7V (Appliances)				
High Loss Voltage	280Vac±7V				
High Loss Return Voltage	270Vac±7V				
Max AC Input Voltage	300Vac				
Nominal Input Frequency	50Hz / 60Hz (Auto detection)				
Low Loss Frequency	40±1Hz				
Low Loss Return Frequency	42±1Hz				
High Loss Frequency	65±1Hz				
High Loss Return Frequency	63±1Hz				
Output Short Circuit Protection	Battery mode: Electronic Circuits				
Efficiency (Line Mode)	>95% (Rated R load, Battery full charged)				
Transfer Time	10ms typical (UPS); 20ms typical (Appliances)				
Output power derating: When AC input voltage drops to 95V or 170V depending on models, the output power will be derated.	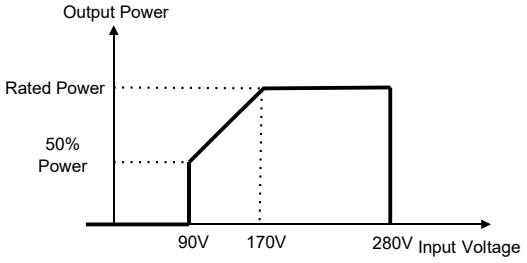				

Table 2 Inverter Mode Specifications

INVERTER MODEL	1.5KW	1.5KW	2.5KW	3.5KW	5.5KW
Rated Output Power	1.5KVA/1.5KW		2.5KVA/2.5KW	3.5KVA/3.5KW	5.5KVA/5.5KW
Output Voltage Waveform	Pure Sine Wave				
Output Voltage Regulation	230Vac±5%				
Output Frequency	50Hz or 60Hz				
Peak Efficiency	94%				
Surge Capacity	2* rated power for 5 seconds				
Nominal DC Input Voltage	12Vdc	24Vdc			48Vdc
Cold Start Voltage	11.0Vdc	23.0Vdc			46.0Vdc
Low DC Warning Voltage Just for AGM and Flooded @ load < 20% @ 20% ≤ load < 50% @ load ≥ 50%	11.0Vdc 10.7Vdc 10.1Vdc	22.0Vdc 21.4Vdc 20.2Vdc			40.4Vdc 42.8Vdc 44.0Vdc
Low DC Warning Return Voltage Just for AGM and Flooded @ load < 20% @ 20% ≤ load < 50% @ load ≥ 50%	11.5Vdc 11.2Vdc 10.6Vdc	23.0Vdc 22.4Vdc 21.2Vdc			46.0Vdc 44.8Vdc 42.4Vdc
Low DC Cut-off Voltage Just for AGM and Flooded @ load < 20% @ 20% ≤ load < 50% @ load ≥ 50%	10.5Vdc 10.2Vdc 9.6Vdc	21.0Vdc 20.4Vdc 19.2Vdc			42.0Vdc 40.8Vdc 38.4Vdc

Table 3 Charge Mode Specifications

Utility Charging Mode						
INVERTER MODEL		**1.5KW**	**1.5KW**	**2.5KW**	**3.5KW**	**5.5KW**
Max Charging Current (PV+AC) (@ VI/P=230Vac)		100Amp	60Amp	100Amp	100Amp	100Amp
Max Charging Current (AC)(@ VI/P=230Vac)		60Amp				
Bulk Charging Voltage	**Flooded Battery**	14.6Vdc	29.2Vdc			58.4Vdc
	AGM / Gel Battery	14.1Vdc	28.2Vdc			56.4Vdc
Floating Charging Voltage		13.5Vdc	27Vdc			54Vdc
Overcharge Protection		16.5 Vdc	32Vdc			63Vdc
Charging Algorithm		3-Step				
Charging Curve		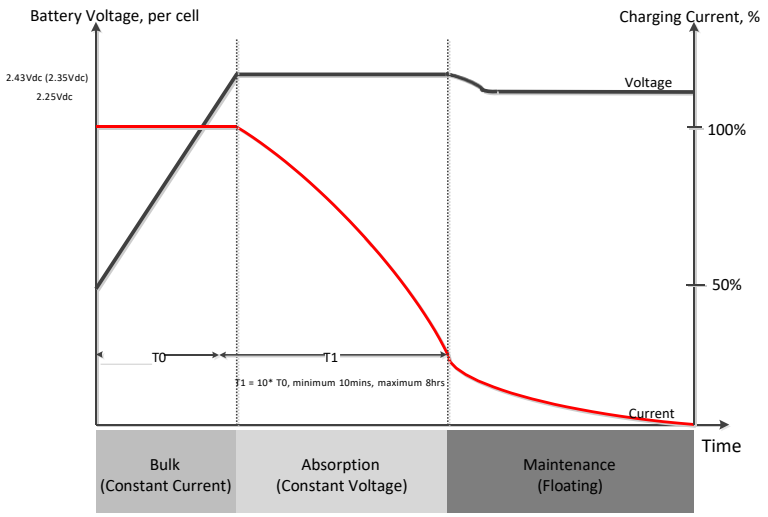				
Solar Input						
INVERTER MODEL		**1.5KW**	**1.5KW**	**2.5KW**	**3.5KW**	**5.5KW**
Rated Power		2000W	2000W	3000W	4000W	5500W
Max. PV Array Open Circuit Voltage		500Vdc				
PV Array MPPT Voltage Range		30Vdc~500Vdc				60Vdc~500Vdc
Max. Input Current		15A	15A	15A	15A	18A
Max. Charging Current(PV)		100A	60A	100A	100A	100A

Table 4 General Specifications

INVERTER MODEL	**1.5KW**	**1.5KW**	**2.5KW**	**3.5KW**	**5.5KW**
Operating Temperature Range	-10°C to 55°C				
Storage temperature	-15°C~ 60°C				
Humidity	5% to 95% Relative Humidity (Non-condensing)				
Dimension(D*W*H), mm	330x278x98				438x295x105
Net Weight, kg	4.0		4.4		8.2

TROUBLE SHOOTING

Problem	LCD/LED/Buzzer	Explanation / Possible cause	What to do
Unit shuts down automatically during startup process.	LCD/LEDs and buzzer will be active for 3 seconds and then complete off.	The battery voltage is too low	1. Re-charge battery. 2. Replace battery.
No response after power on.	No indication.	1. The battery voltage is far too low. 2. Battery polarity is connected reversed.	1. Check if batteries and the wiring are connected well. 2. Re-charge battery. 3. Replace battery.
Mains exist but the unit works in battery mode.	Input voltage is displayed as 0 on the LCD and green LED is flashing.	Input protector is tripped	Check if AC breaker is tripped and AC wiring is connected well.
	Green LED is flashing.	Insufficient quality of AC power. (Shore or Generator)	1. Check if AC wires are too thin and/or too long. 2. Check if generator (if applied) is working well or if input voltage range setting is correct. (UPS→Appliance)
	Green LED is flashing.	Set "Solar First" as the priority of output source.	Change output source priority to Utility first.
When the unit is turned on, internal relay is switched on and off repeatedly.	LCD display and LEDs are flashing	Battery is disconnected.	Check if battery wires are connected well.
Buzzer beeps continuously and red LED is on.	Fault code 07	Overload error. The inverter is overload 110% and time is up.	Reduce the connected load by switching off some equipment.
	Fault code 05	Output short circuited.	Check if wiring is connected well and remove abnormal load.
	Fault code 02	Internal temperature of inverter component is over 100°C.	Check whether the air flow of the unit is blocked or whether the ambient temperature is too high.
	Fault code 03	Battery is over-charged.	Return to repair center.
		The battery voltage is too high.	Check if spec and quantity of batteries are meet requirements.
	Fault code 06/22	Output abnormal (Inverter voltage below than 190Vac or is higher than 260Vac)	1. Reduce the connected load. 2. Return to repair center
	Fault code 08/09/15	Internal components failed.	Return to repair center.
	Fault code 13	Over current or surge.	Restart the unit, if the error happens again, please return to repair center.
	Fault code 14	Bus voltage is too low.	
	Another fault code		If the wires is connected well, please return to repair center.